Crafted in Switzerland

PC-12 NG

THE WORLD'S GREATEST SINGLE

PILATUS

THE WORLD'S GREATEST SINGLE

PC-12 NG

The Swiss Alps, Switzerland | 46°39'40"N | 8°23'18"E

Pilatus Headquarters, Switzerland | 46°58'24"N | 8°22'51"E

A CLASS OF ONE

NOTHING ELSE COMPARES

Since its founding in 1939, Pilatus has been designing and building aircraft at the base of Mount Pilatus in Stans, Switzerland. Being surrounded by the rugged terrain of the Swiss Alps has been a key influence in the design of unique aircraft to meet the demands of such an environment. The success of Pilatus as the world's leading manufacturer of single engine turboprop aircraft can also be attributed to the clear-eyed pragmatism of our engineers and designers. A unique ability to look at every problem as an opportunity to challenge conventional thinking and create something where it did not previously exist before is what sets Pilatus apart.

With the introduction of the PC-12 NG, a new category of supremely versatile aircraft was born combining executive level amenities with the rugged capability to reach the most remote locations. The PC-12 NG has come to exemplify the unique combination of Swiss engineering and dedicated craftsmanship, yielding a superior flight, passenger, owner and operator experience that is truly beyond comparison.

A CLASS OF ONE

DO ONE THING REALLY, REALLY WELL

Every great product includes a hallmark feature that separates it from the competition. An icon is created from inventing a category where one did not previously exist. One could say the PC-12 NG breaks this tradition by being good at so many things. Yet, the fact that it's so incredibly versatile is indeed the one thing that sets the PC-12 NG apart from those that pretend to be of the same class.

Page, Arizona, USA | 36°55'33"N | 111°26'54"W

21,300
RUNWAYS WORLDWIDE

The PC-12 NG can operate from paved, dirt, grass or gravel runways as short as 2,600 ft (792 m).

+84%
WORLDWIDE DESTINATIONS AVAILABLE TO THE PC-12 NG

11,600
RUNWAYS WORLDWIDE

Typical light jets and large turboprops require paved runways longer than 3,500 ft (1,067 m).

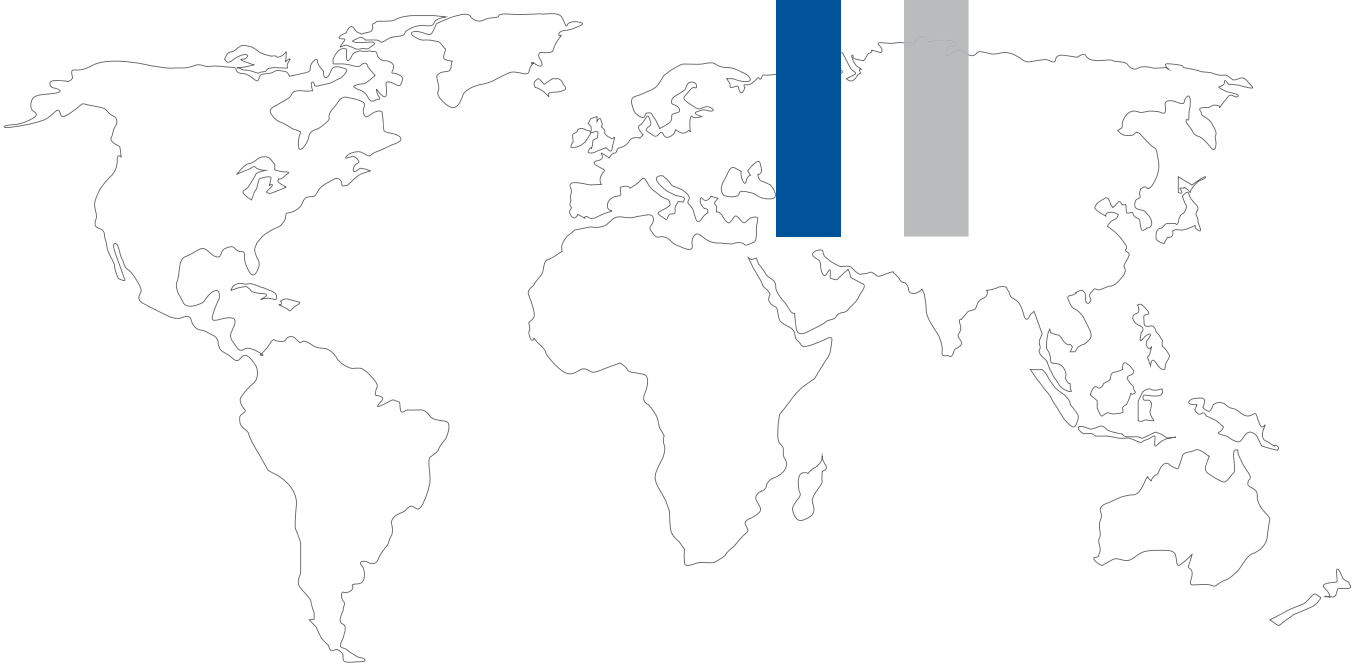

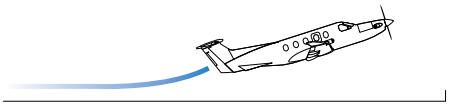

Takeoff Distance: 2,600 ft (792 m)
Over 50 ft (15 m) obstacle at MTOW

Landing Distance: 2,170 ft (661 m)
Over 50 ft (15 m) obstacle at MLW, without reverse

Sources: World runway database at OurAirports.com. Runway surface type from OurAirports.com, SkyVector.com, AirportGuide.com and Google Maps. Airports worldwide for which sufficient valid data was available were included in the study.

A CLASS OF ONE

EXPAND YOUR LIST OF GET-AWAY DESTINATIONS

3,500 feet (1,067 m) is a short runway. And, pilots of twin turboprops and business jets would be justifiably proud to operate their aircraft from such a small airport. Business aviation is all about getting to places you can't access on an airliner, and there happen to be more than 11,600 paved runways in the world that are 3,500 feet (1,067 m) or longer. But, the PC-12 NG is not like other business aircraft. At maximum gross weight, it only needs 2,600 feet (792 m) of runway, and it can also land on grass, gravel and dirt.

That extra performance opens up your world of options to more than 21,300 runways – almost double the number of locations accessible to aircraft costing millions more. Imagine the possibilities. Imagine the time savings. Imagine where the Pilatus PC-12 NG will take you.

Meticulously engineered to provide an unmatched level of robustness and durability that Pilatus owners know does not exist in any other aircraft. The PC-12 NG's unmatched performance allows for incredible destination possibilities. Stories abound regarding this legendary aircraft - what will yours be?

Arkaroola, South Australia | 30°24'40"S | 139°20'80"E

Potash Pools, Utah, USA | 23°7'20"N | 131°37'20"W

WELCOME ON BOARD

GO AHEAD AND STRETCH YOUR LEGS

Welcome to Pilatus Class. The PC-12 NG's cabin volume is greater than most turboprops and medium sized business jets costing twice as much. With the addition of a new five blade propeller, vibration and cabin noise are further reduced allowing for a relaxed environment and pleasant conversation. Executive seats engineered for comfort and in-flight access to the baggage compartment set the stage for any trip - quick hop or long haul. A spacious, discrete lavatory is integrated into the forward portion of the cabin offering complete privacy without infringing on baggage space. A completely flat floor gives passengers even greater comfort throughout the longest of flights. The intelligent use of storage space coupled with legendary versatility enable the PC-12 NG - to reconfigure for almost any mission in just minutes. Shouldn't your business aircraft give you more? Pilatus thought so, and created the PC-12 NG.

WELCOME ON BOARD

IT'S ALL IN THE DETAILS

Form follows function. But in the PC-12 NG, it's a very close second. Partnered with BMW Designworks to craft modern, elegant interior designs, each aircraft is individually and exquisitely crafted to not only meet the requirements of our customers, but also those of our Swiss manufacturing heritage. From the very moment you enter the cabin, it's apparent that the PC-12 NG is truly in a class of its own - even among aircraft priced much higher. You'll appreciate the old world craftsmanship and attention to detail presented in the form of custom leather work, rare-wood cabinetry and fine upholstery that abound throughout the aircraft. With such an extensive design palette, even the most discerning would be hard pressed to find a more luxurious cabin. Go ahead and sweat the details - we certainly do.

Bozeman Yellowstone International Airport, Montana, USA | 45°46'39"N | 111°9'7"W

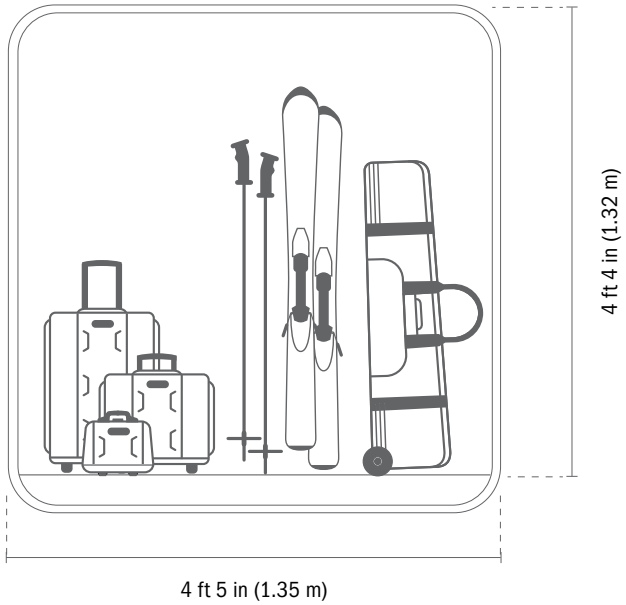

WELCOME ON BOARD

FOR THOSE WHO DON'T TRAVEL LIGHT

Big things can be expected from such a big door. The PC-12 NG and the PC-24 are the only business aircraft to feature a pallet-sized cargo door as standard. But without practical cabin volume, the door is simply a grand opening. The PC-12 NG features an impressive cargo space that takes advantage of the flat floor architecture within, providing a multitude of uses. PC-12 pilots like to say, “If it fits through the door, you can take it with you". In addition, your baggage is easily accessible during flight in the heated and pressurised aft cabin section. The generous centre of gravity (CG) range of the PC-12 NG coupled with the quick-change interior contributes to its legendary versatility. So on your next trip, you may not have to choose what you bring - just take it all.

Miami, USA | 25°45'42"N | 80°11'30"W


PILATUS

AVIONICS AND POWERPLANT

ADVANCED HAS NEVER BEEN SO SIMPLE

Only the Pilatus PC-12 NG offers the advanced avionics of a high-end business jet tailored for the single pilot. Featuring an autopilot optimised for stability and smoothness, and SmartView™ synthetic vision with performance-based HUD symbology, the Honeywell Primus Apex™ integrated avionics suite sets the bar for ultimate control and situational awareness without a steep learning curve. Simple. Powerful. Intuitive. Definitely Pilatus.


Performance
FMS
Lat Mode: GPS
Position: N39°19.29
W103°08.04
EPU: 0.00 NM
PILATUS

AVIONICS AND POWERPLANT

ONE AIRPLANE, ONE ENGINE, ONE ORIGINAL

Believing the power of the single-engine design lies in the marriage of technology and simplicity, development of the PC-12 called upon Pilatus' long history of building training aircraft for the world's air forces. It should come as no surprise that safety and reliability were at the top of the list of design goals for the PC-12 NG. The aircraft is equipped with numerous redundant and fail-safe systems and structures, and powered by the Pratt & Whitney Canada PT6, considered to be the most dependable aircraft engine ever built.

Many people harbour an irrational fear of single-engine aircraft based on the notion that airplanes with two or more engines are safer. While that may have once been true more than half a century ago, it is simply no longer the case. In the early days of aviation, aircraft engines lacked both power and reliability, and multiple engines were needed to lift high payloads and deliver them dependably to their destinations. Today, the reliability of modern turbine engines is so high that an engine malfunction is rarely the primary contributor to an accident. Ironically, according to an National Transportation Safety Board report, an engine failure in a twin turboprop is four times more dangerous than in a single.

In 2014 Pilatus set out to demonstrate once and for all the capabilities and safety of the single engine concept by circumnavigating the globe in a PC-12 NG. Following the path of one of aviation's earliest pioneers and flying more than 80% of the distance over water, the PC-12 NG successfully completed the journey without a single squawk.

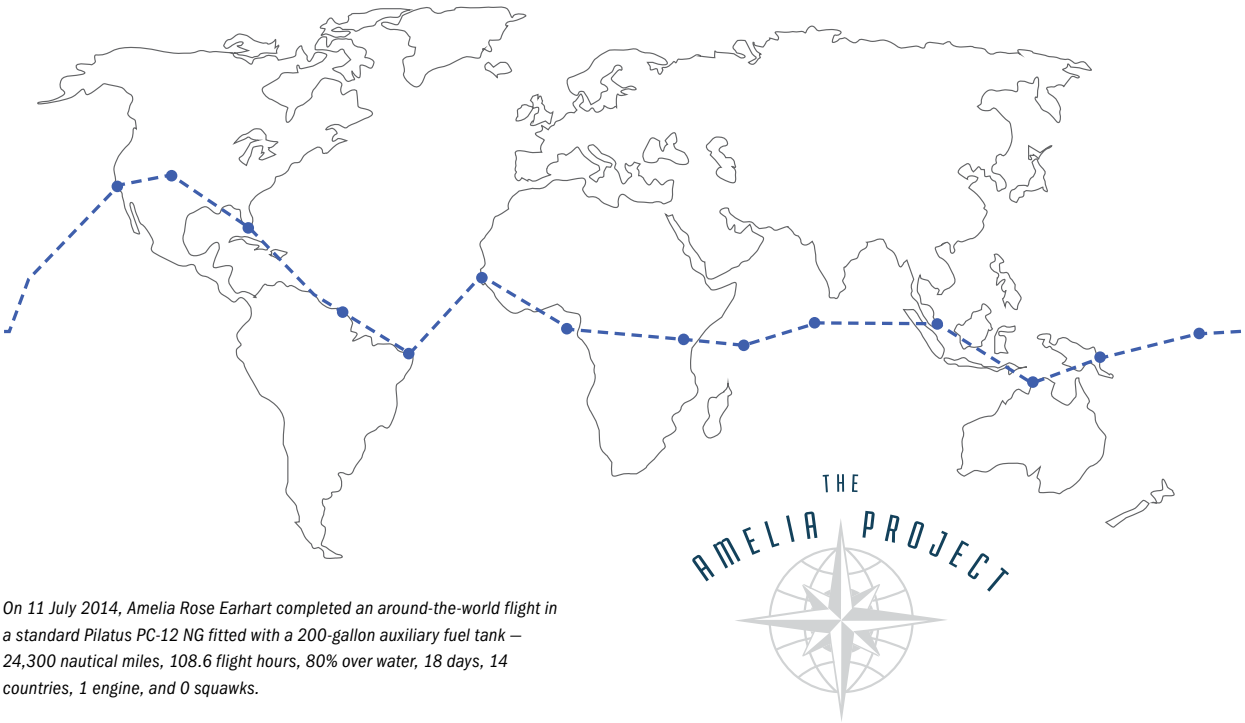

On 11 July 2014, Amelia Rose Earhart completed an around-the-world flight in a standard Pilatus PC-12 NG fitted with a 200-gallon auxiliary fuel tank — 24,300 nautical miles, 108.6 flight hours, 80% over water, 18 days, 14 countries, 1 engine, and 0 squawks.

Kimberley, Western Australia | 17°73'07"S | 125°99'04"E

Southern California Coast, USA | 34°05'22"N | 118°24'37"W

VALUE RETENTION

(2011 and 2006 model year aircraft current average retail value as a percent of factory new list average equipped price

Source: Aircraft Bluebook, Winter 2016, Vol. 16-04)

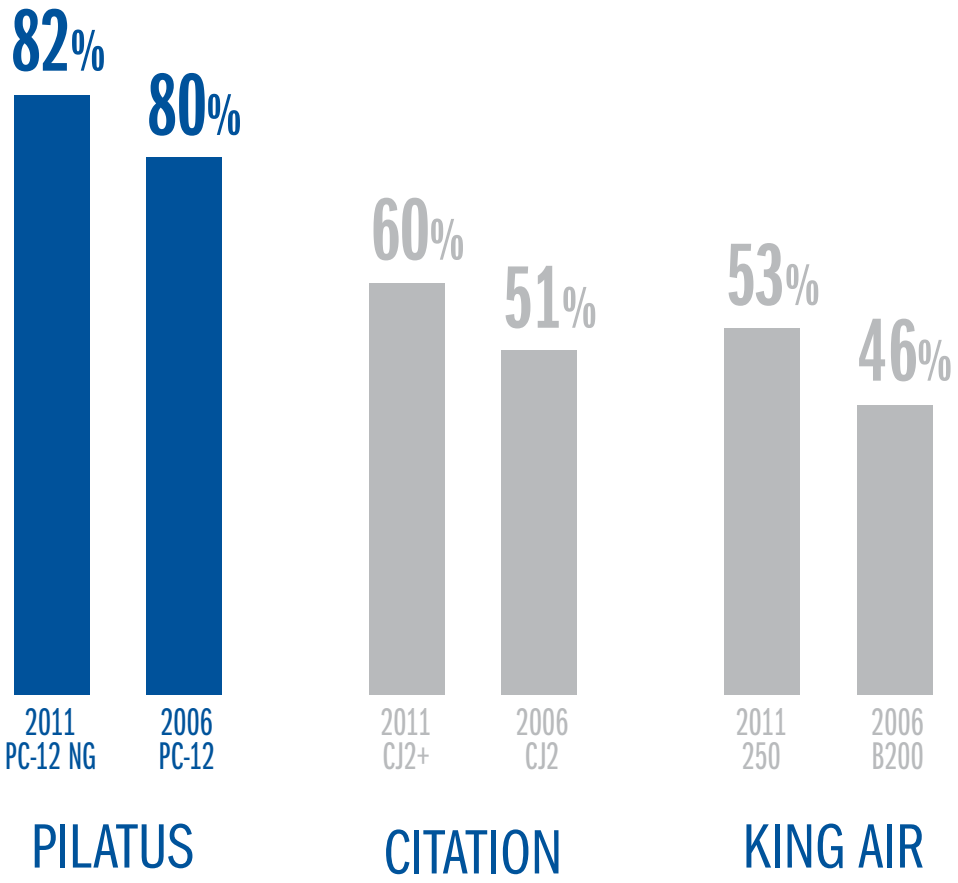

WE KNOW YOUR CFO WILL APPROVE

You simply won't find a business aircraft that offers as much value for the investment than the PC-12 NG. In fact, you can own and operate a complete PC-12 NG for less than what it costs for a quarter share of most fractional jets. Its operating costs are just two-thirds that of similar twin turboprops and about half that of comparable jets. What's more, like any exclusive, finely crafted work of art, the PC-12 NG has historically held a much higher resale value than its competitors.

CUSTOMER SUPPORT

PRIORITY ONE: THE CUSTOMER COMES FIRST

We succeed only when you do and we've gained a deep understanding of the needs and expectations of our customers. How do we know this? In survey after survey, PC-12 owners and operators rank Pilatus customer service the highest in the industry – 15 consecutive years, to be exact.

As an owner of an aircraft made by Pilatus, you will receive personal attention through our global service network. Training, spare parts, service and real people are just a mouse click or phone call away. In addition, each Pilatus aircraft comes with one of the strongest new-aircraft warranties in the industry. Pilatus makes every effort to ensure maximum uptime for your aircraft. In short, we worry about the airplane so you don't have to. As you can see, our customer service is more than first class – it's Pilatus Class.

Smiley Creek, Idaho, USA | 43°54'25"N | 114°47'48"W


PILATUS

SWISS CRAFTSMANSHIP

ENGINEERED LIKE NO OTHER AIRCRAFT

Fastidious and dedicated, many second and third-generation Pilatus employees focus on building the very best aircraft through a merging of state-of-the-art technology and traditional Swiss craftsmanship. We call it “the Pilatus Class” and describe it simply as the highest standard for precision and quality.

The Pilatus Porter PC-6 has been heralded as one of the most extraordinary bush planes ever built. In continuous production since 1959, it’s still the world’s leading STOL aircraft.

Our current military training aircraft, the PC-7 MkII, the PC-9 M, and the PC-21 make up a product family with which thousands of air-force pilots around the world have earned their wings. And the new PC-24 Super Versatile Jet creates a completely new category of business aircraft continuing the tradition of innovation.

The PC-12 is the benchmark for outstanding versatility, performance, reliability and operational flexibility. As such, it is one of the most popular turbine-powered business aircraft on the market today with over 1,400 delivered to date.

Florida Keys, USA | 24°33'18"N | 81°46'47"W

WHY OWN A PC-12 NG?

TEN REASONS

1. SHORT RUNWAYS

The PC-12 NG can utilise runways as short as 2,600 feet (792 m) at its maximum weight. Fly closer to your ultimate destination and save overall travel time.

2. UNPAVED SURFACES

Able to operate from runways made of dirt, gravel, and grass, the PC-12 NG can take you places you've never been in a business aircraft. Go ahead and explore. You might be surprised to see another PC-12 at your favourite backcountry get-away.

3. CABIN SPACE

With 330 ft^3 (9.34 m^3) of cabin volume, you will enjoy more space than business jets costing twice as much. A flat-floor gives your passengers more comfort and gives you the ability to easily load just about any cargo you can fit.

4. CARGO DOOR

Other than Pilatus' own PC-24 Super Versatile Jet, no other business aircraft features a standard cargo door in addition to a main passenger entry door. Designed to allow a fork-lift to load a standard pallet directly into the cabin, it can surely fit your luggage, your motorcycle, and your surf board.

5. LEADERSHIP

In production for more than 20 years, Pilatus created the category of the large single engine turboprop business aircraft with the PC-12. While traditional business aircraft manufacturers said it would never fly, today it leads the entire market in sales, and enjoys a safety record on a par with professionally-crewed twin engine business jets.

6. VERSATILITY

PC-12s are in use around the world with owner-pilots, corporations, charter and fractional companies, air ambulances, special missions, cargo and law enforcement agencies. This extreme versatility gives owners confidence that their investment in a PC-12 NG is a sound decision.

7. EFFICIENCY

Maybe it's our Swiss DNA, but we are not wasteful, and neither is our aircraft. The whole concept behind the single engine turboprop PC-12 NG is to travel farther, faster, in more comfort, on less fuel.

8. RESALE VALUE

PC-12 owners and their accountants enjoy one of the highest resale value retention rates in all of business aviation. Historically, 5-year old PC-12s have retained 85% of their original retail price when sold or traded-in – often for another PC-12.

9. CRAFTED IN SWITZERLAND

Pilatus is the only Swiss aircraft manufacturer. Since 1939, every Pilatus aircraft has been designed and manufactured with legendary Swiss quality. We're proud to be called over-engineered.

10. SERVICE

At Pilatus, we design and support our aircraft with the goal of keeping you flying. Our business model is not built on profiting from our customer's down time. For 15 consecutive years, our service has been rated #1 in the business turboprop market.

FACTS AND FIGURES

INTERIOR CONFIGURATIONS

1 EXECUTIVE SIX-SEAT

Make the most out of the PC-12 NG cabin with ample space for passengers, baggage, catering equipment and a private lavatory.

2 EXECUTIVE SIX + TWO

Whenever the need arises, the pilot can simply add or remove two quick-release seats, allowing flexible accommodation for six to eight passengers.

3 EXECUTIVE EIGHT-SEAT

The ultimate in executive transport, it has ample room for passengers as well as baggage in luxury accommodation. And nobody has to ride in the lavatory.

4 COMMUTER

A true workhorse, a single pilot can transport up to ten passengers and their gear to the most remote locations – quickly and safely.

5 COMBI

Whether it's a critical spare part for a remote oil rig or simply your favourite motorbike or surfboard – travel in style and leave nothing behind.

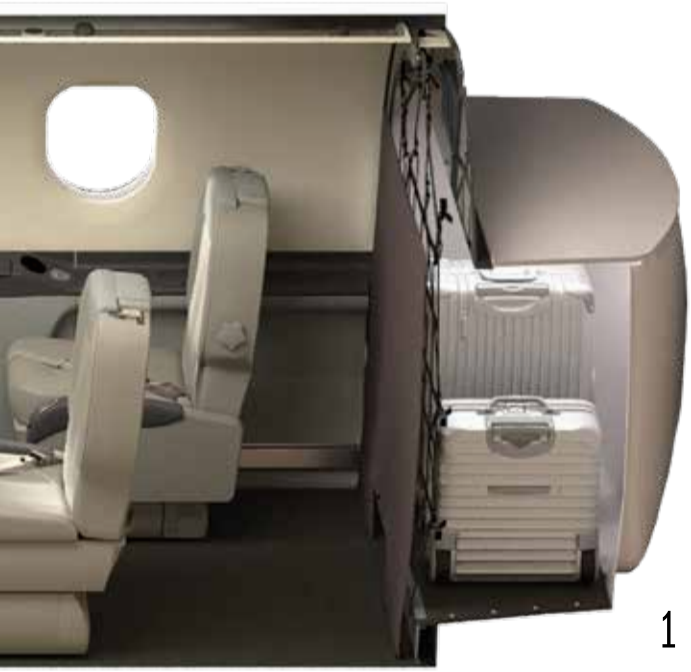

1

2

3

4

5

6

7

6 CARGO

A blank slate with so many possibilities: special missions platform or pure cargo transport – let us know how you plan to use the PC-12 NG and we'll create a custom solution for you.

7 AIR AMBULANCE

Air ambulance operations require easy cabin access, patient comfort and robust interior functionality while operating in remote locations - PC-12 NG specialties.

FACTS AND FIGURES

DIMENSIONS AND WEIGHTS

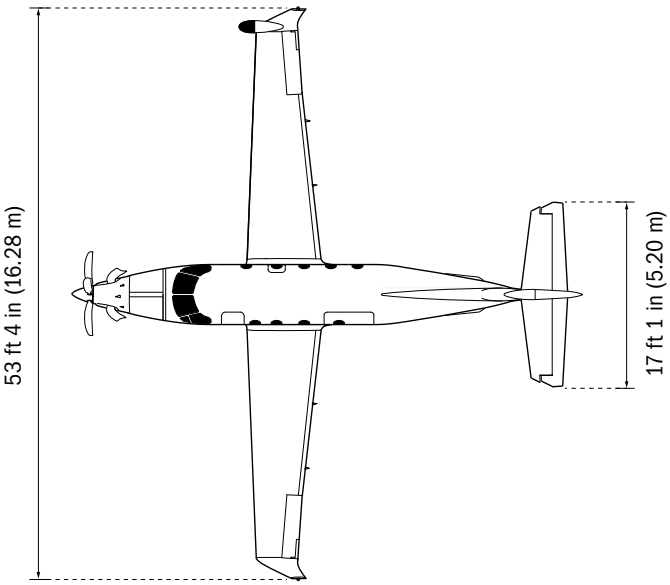

DIMENSIONS (EXTERIOR)

Wing Span	53 ft 4 in	16.28 m
Length	47 ft 3 in	14.40 m
Height	14 ft 0 in	4.26 m
Horizontal Tail Span	17 ft 1 in	5.20 m
Wheeltrack	14 ft 10 in	4.53 m
Wheelbase	11 ft 5 in	3.48 m
Propeller Diameter	8 ft 9 in	2.67 m
Propeller Ground Clearance	12.5 in	0.32 m
Turn Radius, Wing Tip	32 ft 2 in	9.80 m
Turn Radius, Outside Main Gear	14 ft 10 in	4.53 m
Wing Area	277.8 ft²	25.81 m²

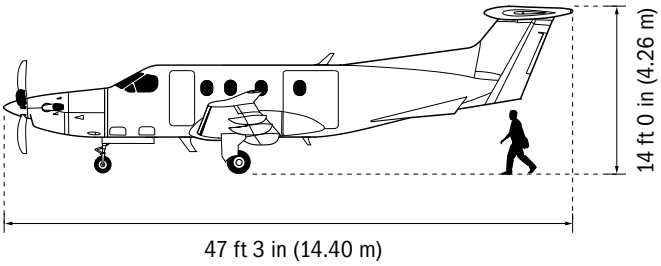

DIMENSIONS (INTERIOR)

Cabin Length (excluding cockpit)	16 ft 11 in	5.60 m
Cabin Width	5 ft 0 in	1.52 m
Cabin Width at Floor	4 ft 3 in	1.30 m
Cabin Height (continuous flat floor)	4 ft 10 in	1.47 m
Cabin Volume (excluding cockpit)	330 ft³	9.34 m³
Baggage Compartment Volume	40 ft³	1.13 m³
Passenger Door Height	4 ft 5 in	1.35 m
Passenger Door Width	2 ft 0 in	0.60 m
Cargo Door Height	4 ft 5 in	1.35 m
Cargo Door Width	4 ft 4 in	1.32 m

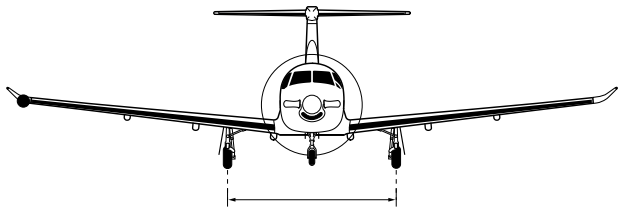

WEIGHTS

Maximum Ramp	10,495 lb	4,760 kg
Maximum Takeoff	10,450 lb	4,740 kg
Maximum Landing	9,921 lb	4,500 kg
Maximum Zero Fuel	9,039 lb	4,100 kg
Usable Fuel (402 U.S. gal)	2,704 lb	1,226 kg
Maximum Payload With Full Fuel*	1,009 lb	458 kg
Basic Operating Weight*	6,782 lbs	3,076 kg

**(executive configuration, including pilot)*

POWERPLANT

Manufacturer	Pratt & Whitney Canada
Model	PT6A-67P
Time Between Overhaul	3,500 hrs
Takeoff Power (flat-rated)	1,200 shp
Takeoff Thermodynamic Power	1,845 shp
Climb/Cruise (flat-rating)	1,200 shp

Propeller, Full-reversing 5 blade Hartzell (Composite)

Propeller Speed (Constant)	1,700 rpm
Time Between Overhaul	4,000 hrs

FACTS AND FIGURES

PERFORMANCE

TAKE-OFF DISTANCE

Over 50 ft Obstacle *(MTOW)*	2,600 ft	792 m

RATE OF CLIMB

Sea Level *(MTOW)*	1,920 fpm	585 m/min
Time To Climb Sea Level To FL 250 *(MTOW)*		20 min

CRUISE

Maximum Cruise Speed *(FL 220)*	285 KTAS	528 km/h

PAYLOAD / RANGE

(NBAA IFR reserves, 100 nm alternate, high speed cruise, ISA, FL300, single pilot, executive configuration)

Max Payload (2,257 lb)	651 nm	1,206 km
6 passengers (1,200 lb payload)	1,460 nm	2,704 km
4 passengers (800 lb payload)	1,617 nm	2,995 km

ALTITUDE

Max Certified Altitude	30,000 ft	9,144 m

LANDING DISTANCE

Over 50 ft Obstacle *(MLW, no reverse)*	2,170 ft	661 m

STALL SPEED

(MTOW)	*67 KIAS*	*124 km/h*

FACTS AND FIGURES

AVIONICS AND SYSTEMS

AVIONICS

The PC-12 NG's flight deck is powered by the Honeywell Primus Apex™ integrated avionics suite. This advanced, intuitive system allows the flight crew to interface with the navigation, communication, situational awareness, and aircraft status and alerting systems. It has been specifically developed for the Pilatus PC-12 NG to provide the high-end capabilities of large business jets and airliners, yet is optimised for single pilot operation.

Key Features:

- 4 display layout with 10-inch PFDs and MFDs
- SmartView™ Synthetic Vision System with HUD based performance symbology (optional)
- Interactive navigation (INAV) System with cursor control device (CCD) on centre pedestal

PRESSURISATION

(5.8 PSI cabin pressure differential)

Cabin Altitude at 13,100 ft (3,993 m)		Sea Level
Cabin Altitude at 26,000 ft (7,925 m)	8,000 ft	2,438 m

ELECTRICAL

The PC-12 NG incorporates five independent power generation sources consisting of:

- Generator 1 - 28V, 300A generator
- Generator 2 - 28V, 300A starter/generator
- Battery 1/Battery 2 - 24V, 42Ah
- Emergency Power Supply (EPS) - 24V, 5Ah lead-acid battery

ICE AND RAIN PROTECTION

Certified for flight into known icing conditions and equipped with icing protection on the wing leading edges, horizontal stabiliser leading edge, windshield, engine inlet, propeller blades, pitot-static and AOA probes.

FLIGHT CONTROLS

Conventional, using push-pull rods and carbon steel cables connected to the pilot and copilot control wheels and rudder pedals. Internal gust locks are set from the cockpit.

LANDING GEAR

Conventional tricycle configuration that is extended and retracted using electro-mechanical actuators.

THE PC-12 NG
THE WORLD'S GREATEST SINGLE

Lake Powell, Utah, USA | 37°32'75"N | 110°42'79"W


PILATUS

CONTACT US

FLY THE WORLD'S GREATEST SINGLE

PLEASE CONTACT US FOR MORE INFORMATION.

US Phone +1 303 465 9099

International Phone +41 41 619 61 11

pc12sales@pilatus-aircraft.com

www.pilatus-aircraft.com

Founded in 1939, Pilatus Aircraft Ltd is the only Swiss company to develop, produce and sell aircraft to customers around the world: from the legendary Pilatus Porter PC-6 to the best-selling PC-12, a single-engine turboprop, and the PC-21, the training system of the future. Pilatus' newest aircraft is the PC-24 – the world's first ever business jet that can be operated from short unprepared runways. Domiciled in Stans, the company is certified to ISO 14001 in recognition of its efforts for the environment. The Pilatus Group includes two independent subsidiaries in Broomfield (Colorado, USA) and Adelaide (Australia) as well as a joint venture company in Chongqing (China). With over 1800 employees at its headquarters, Pilatus is one of the largest employers in Central Switzerland. Pilatus provides training for over 110 apprentices in eleven different professions – job training for young people has always been a very high priority at Pilatus.

PIL1216D

Pilatus Aircraft Ltd
P.O. Box 992
6371 Stans, Switzerland
Phone +41 41 619 61 11
info@pilatus-aircraft.com

Pilatus Business Aircraft Ltd
Rocky Mountain Metropolitan Airport
11755 Airport Way
Broomfield, CO 80021, USA
Phone +1 303 465 9099
info@pilbal.com

Pilatus Australia Pty Ltd
17 James Schofield Drive
Adelaide Airport SA 5950, Australia
Phone +61 8 8238 1600
info@pilatus.com.au

www.pilatus-aircraft.com

PILATUS